DEFENCE AND SPACE
Space Products

PSR 50V MKII

A single integrated & modular unit to power your Satcom up to 11.2kW

P o w e r

The Airbus Power Supply Regulator (PSR), also commonly known as a Power Conditioning Unit (PCU), has been developed in the frame of the Eurostar 3000 telecommunication satellite. It is in charge of powering the spacecraft from solar array panel in sunlight mode and from 1 or 2 batteries during eclipse.

The power handling capacity of the PSR 50V MKII ranges between up to 11.2kW under 50V.

The PSR design is based on a modular approach in order to cope with specific mission requirements by minimizing the non-recurring costs. Its internal architecture is designed to comply with the reliability target with a single unit per spacecraft.

More than 900 years cumulated in-orbit operation, with over 80 units in flight, the PSR 50V MKII is the power conditioning unit for the Eurostar 3000 satellite family with customers as Intelsat, Inmarsat, Eutelsat, SES, Hispasat, Telesat, Direct TV, Echostar, IAI, KARI, JAXA…

Main application fields:

- Telecommunication satellites
- GEO Earth Observation satellites

AIRBUS

KEY FEATURES

- Provides a centralized low impedance point for power distribution (payload & platform)
- Combines power sources from the solar arrays (Si & AsGa technologies) and batteries in a controlled and high efficiency manner: the PSR is directly plugged to solar generator and battery from one side and payload & platform from the other side, without any additional interface/management box
- Achieves the bus regulation under all spacecraft operating conditions
- Provide to the OBC the battery TM (voltage, current) necessary for charge management. Regulate the battery charge current according to OBC consign
- The PSR also provides relays TC, analogue telemetries and bilevel telemetries for equipment management

INTERFACES

- Power bus: 50V regulated ± 0.5V
- Battery: NiH2 or Li-Ion
- Dialog: MIL STD 1553 Bus
- Relay TC: 88 internal, 168 external
- Analogue TM: 178 internal, 14 external
- Bi-level TM: 70 internal, 58 external

ENVIRONMENTS

- Thermal: -35°C to +70°C (operation and performance)
- Vibrations: 20 g sine 10 g rms in plane and 16g rms out of plane random
- Shocks: 600g in plane and 900g out of plane, over 1kHz to 10kHz
- Radiation: 15 years in GEO orbit, SEP tolerant, latchup immune
- EMI/EMC: MIL-STD-461

BUDGETS

- Mass: 22kg @ 3.7kW - 38.3kg @ 11.2kW
- Volume: 448 to 683 x 322 x 205mm3
- Power: up to 11.2kW @ 50V

The PSR 50V MKII in its environment: solar arrays, batteries, Satcom bus bar and OBC

Made-up with two main parts, the PSR is versatile and can be adapted to mission from up to 11.2kW:

- A Central Module (CM), including MIL STD 1553B buses coupling (nominal & redundant), TM/TC management (nominal & redundant), batteries monitoring, external current telemetries, batteries charge and reconditioning circuits, self-healing bank of capacitors and reliable APS.
- A set of Power Modules (PM) up to 16 units depending of the required output power. Each PM can deliver up 750W.

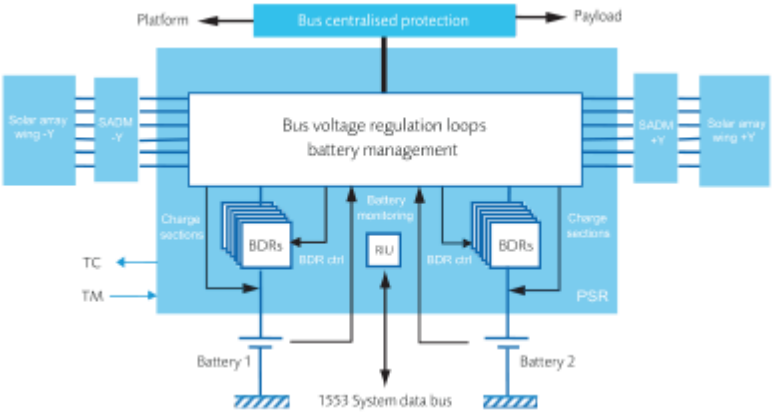

Performances of the PSR 50V MKII

Power output:	3.7kW/6 PMs to 11.2kW/16 PMs 750W PM steps
Bus voltage:	50V ± 0.5V
Bus impedance:	<35 mOhm
Bus voltage ripple:	0.3 Vrms
Sun regulation:	Between 5 to 15GS section 20.2 A max per section
Battery type:	Li-Ion, NIH2
Battery voltage:	28V < V battery < 47V
Battery management:	Autonomous charge current regulation Up to 2 batteries charge up to 40A 20A if bi batteries configuration
Efficiency:	Battery discharge 94% Solar array 96.5%

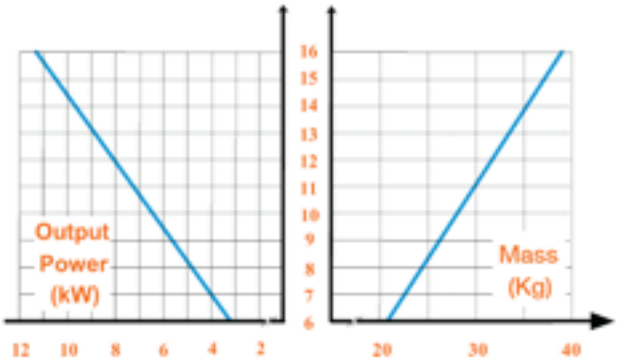

Number of power modules

Airbus Defence and Space
space.products@airbus.com